info@ptlsolar.com www.ptlsolar.com

SOLAR MODULES

SMALL-SIZE PHOTOVOLTAIC MODULES - MODULE GES/PV/20

The new photovoltaic modules **GES/PV/20** have been designed for rural electrification, data survey, telecommunications and special applications. Thanks to their versatility, these modules are used for photovoltaic systems both in the developing countries and the European market. Their performance and reliability have been recently improved thanks to the introduction of high efficiency mono crystalline cells. At the typical battery operating voltage (12,5V) the GESOLAR™ technology, developed for high-efficiency modules range, allows a remarkable increase of the current output (about 10-17%) compared to the traditional modules. This feature makes these modules very suitable for systems with batteries and attractive for low-budget and special applications. Composed of 38 and 72 high-efficiency 165mm mono crystalline cells and they have been designed to operate under the toughest environmental conditions.

Up to now GESOLAR™ modules have guaranteed an average lifetime of more than 30 years.

Easy and practical interconnections allow any voltage and configuration. A properly-designed anodized aluminum frame makes these modules safe, easy and quick to install in several situations.

MODULE GES/PV/20

Guaranteed power	>80% 25 years
Relative humidity	up to 100%
Dimensions	524 x 325 x 34 ± 1mm
Weight	2,35 Kg
Tolerance on technical data	±10%

ELECTRICAL SPECIFICATIONS

Maximum Power (Wp)	20 Watts
Short circuit current (Isc)	1.16 Amps
Open circuit voltage (Voc)	20.50 Volts
Voltage at maximum power (Vmp)	16.50 volts
Current at maximum power (Imp)	1.21 Amps
Typical Current at battery operating voltage (12,5V)	1.27 Amps
NOCT (Nominal operating cell temperature)	43±2 °C
Change of Voc with temperature (ß)	-90 mV/°C
Wind loading or surface pressure	N/m2 2400 (200 km/h equiv.)
Hailstone impact resistance	28mm at 23 m/s
Storage and operating temperature	from -40 up to +95 °C

MODULE PHYSICAL FEATURES

GESOLAR™ modules are made using the most advanced techholes, practical and compact, which allows a quick and easy installation of all GESOLAR™ modules. The corner/frame assembly system, devised in 1982, has proven to deliver mechanical strength and perfect electric continuity between the frame nologies, thanks to the wide experience gained by GESOLAR™ in the PV field and the suggestions coming from skilled installers. The result is a frame with 4 slotted

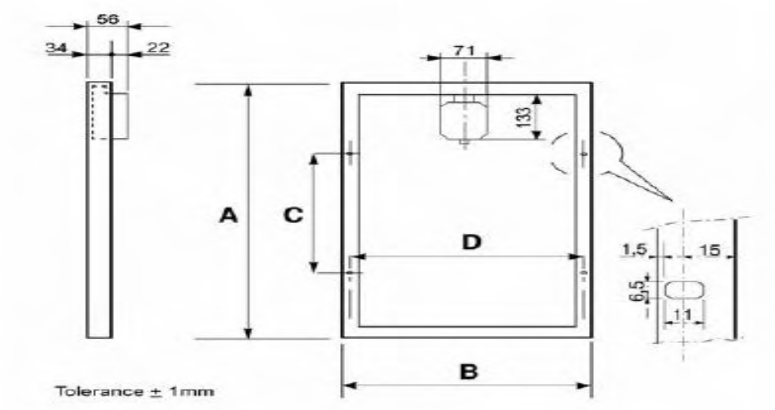

components.

A	B	C	B
524 mm	325 mm	250 mm	295 mm

MODULE CROSS SECTION

The cells are laminated in permanent way between sheets of ethylene vinyl acetate (EVA), tempered glass and white Tedlar, in order to offer an ideal protection against humidity penetration and salty corrosion. The tempered glass whose main characteristic is the high transparence to the direct and diffused light, is fixed to the frame by silicone sealant which assures an efficient protection against mechanical and environmental stress.

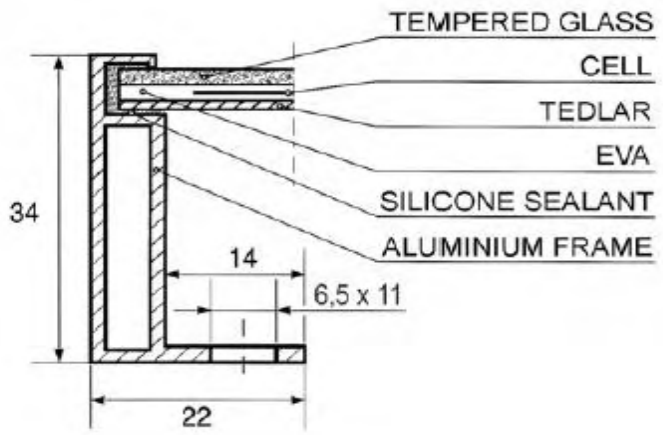

JUNCTION BOX

A waterproof, high capacity junction box with protection degree IP65 contains the by-pass diode and appropriate connection terminals. It is equipped with one PG9 cable glands for easy inter connections. The junction box is made always keeping in mind the requirements of the installers.

As a matter of fact:

1. All the sc rews c an be ea sily tighte ned usin g f lat or sta r screwdrivers.
2. The covers are fitted w ith self-retaining sc rews and hook ed to the junc tion box, for e asy handling a nd maintenance.
3. All the c onnections are soldered for v ery long dura bility and reliability.
4. Connection terminals and by-pass diodes are mounted on a PC board for easy replacement in case of damage by lightning.